Stainless steel column drinking fountain

Ref. 064206 350 × 300 × 850 mm · Stainless steel

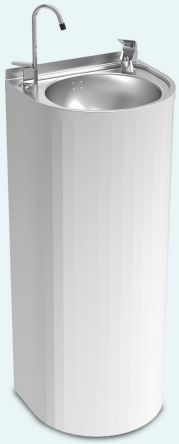

Dimensions

Dim.	Description	mm
L	Length	350
A	Width	300
H	Height	850
d	Bowl diameter	260
h	Bowl depth	115

Dimensioned drawing

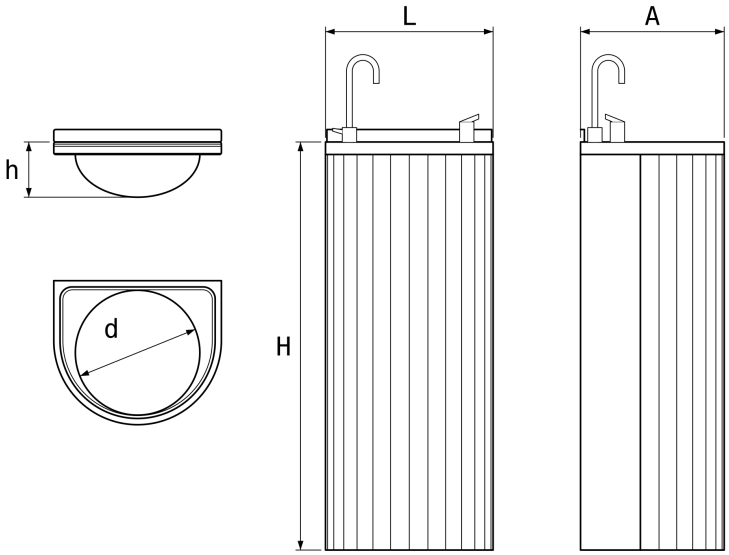

Features

- Stainless steel, satin brushed finish.
- Two independent outlets: push-button bubbler and gooseneck filling tap.
- Round bowl with raised rim, waste outlet with overflow included.
- Column standing on the floor and fixed to the wall with the 4 screws supplied.
- Connection to the drinking water supply: 3/8".
- Flow rate: 8 l/min at the bubbler, 10 l/min at the filling tap.
- No electricity, water at ambient temperature.
- Optional: filter kit ref. 064270.

Material	Net weight	Packaging	Warranty
Stainless steel	**7 kg**	**1 unit**	**2 years**

LIONINOX SAS · 334 rue Nicolas Parent, 73000 Chambéry, France
info@lioninox.com · www.lioninox.com